SAMSUNG CONFIDENTIAL
THIS DOCUMENT CONTAINS CONFIDENTIAL
PROPRIETARY INFORMATION THAT IS
SAMSUNG ELECTRONICS CO'S PROPERTY.
DO NOT DISCLOSE TO OR DUPLICATE FOR OTHERS
EXCEPT AS AUTHORIZED BY SAMSUNG.

SM-M146B REV0.2A

2022.12.23

sheet01 : GSM / WCDMA / LTE / 5G sub6 RF
sheet02 : N78 DRX
sheet03 : APT, TRANCEIVER
sheet04 : SENSORS,CONNECTIVITY
sheet05 : AP(MT6833)
sheet06 : PMIC(Main,IF), KEY, MOTOR, UFS
sheet07 : AUDIO, SD/SIM, SHIELD CAN, IF CON
sheet08 : CAMERA, DISPLAY

SAMSUNG CONFIDENTIAL
THIS DOCUMENT CONTAINS CONFIDENTIAL
AND PROPRIETARY INFORMATION OF
SAMSUNG ELECTRONICS CO'S PROPERTY.
DO NOT DISCLOSE TO OR DUPLICATE FOR OTHERS
EXCEPT AS AUTHORIZED BY SAMSUNG.

RF PART 1

MAIN ANT1
LB TRX

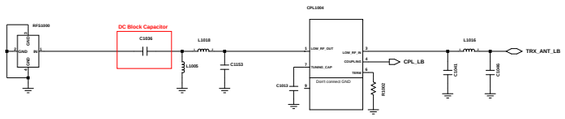

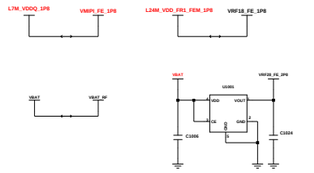

FEMiD VDD LDO

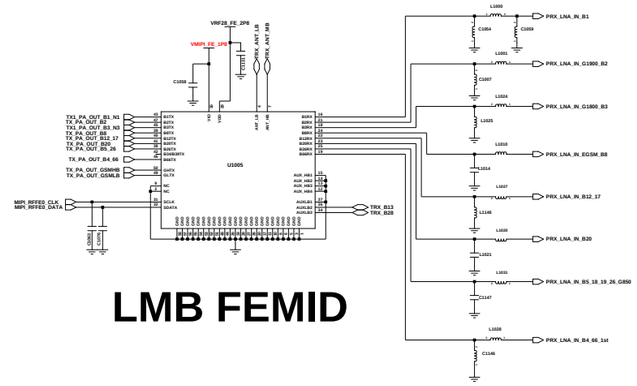

LMB FEMID

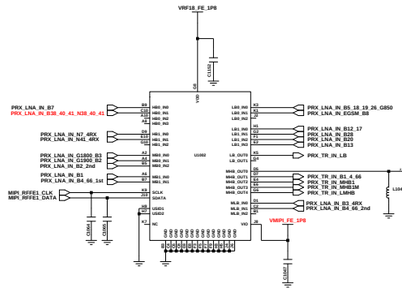

PRX LNA BANK

MAIN ANT2
MB/HB TRX

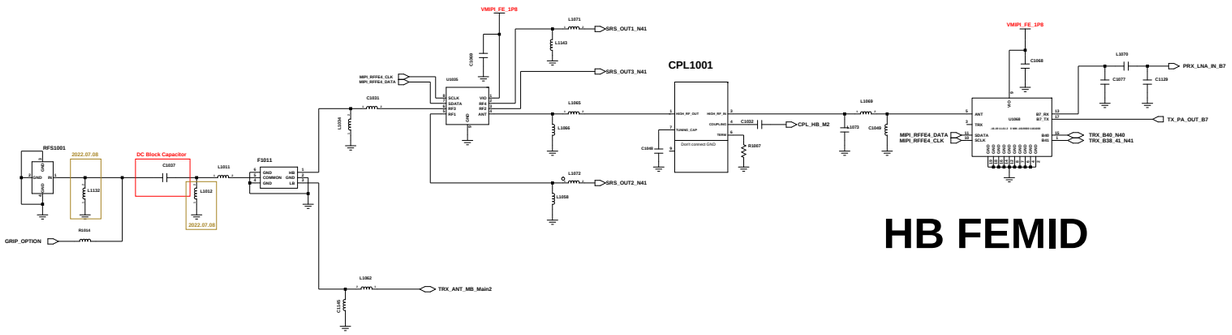

HB FEMID

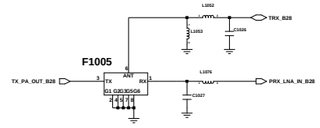

B28_DPX

M14 NC

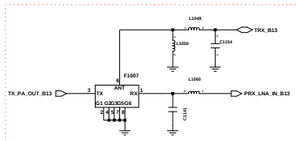

B13 DPX

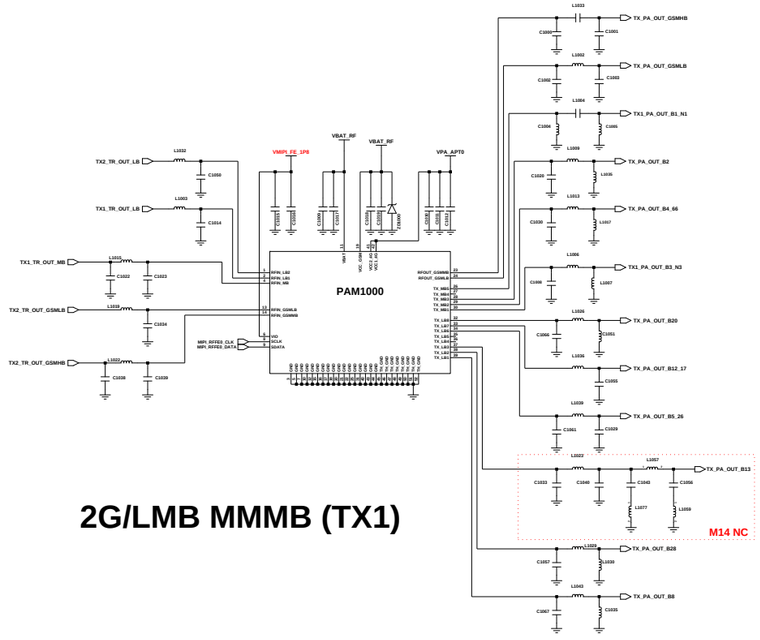

2G/LMB MMMB (TX1)

MAIN ANT3
N1/N3/N66 TRX (for M-M/M-H ENDC)

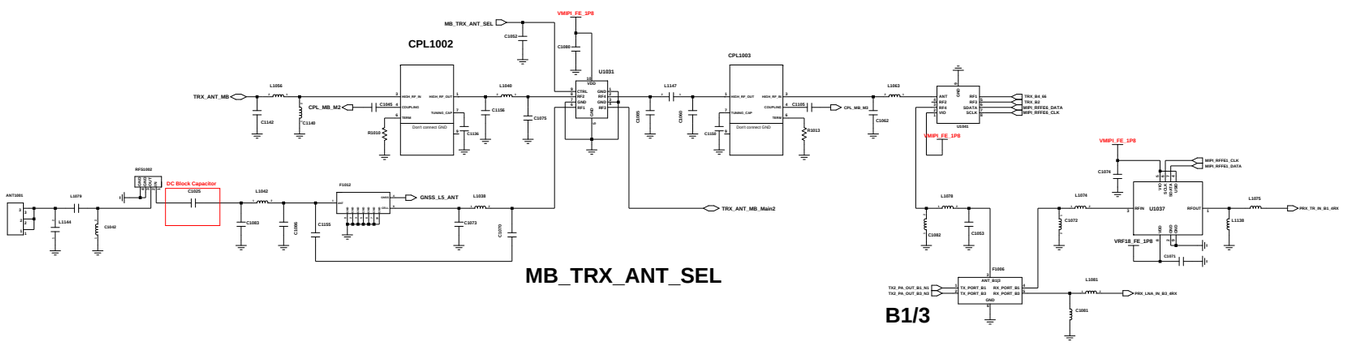

MB_TRX_ANT_SEL

B1/3

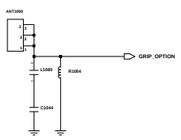

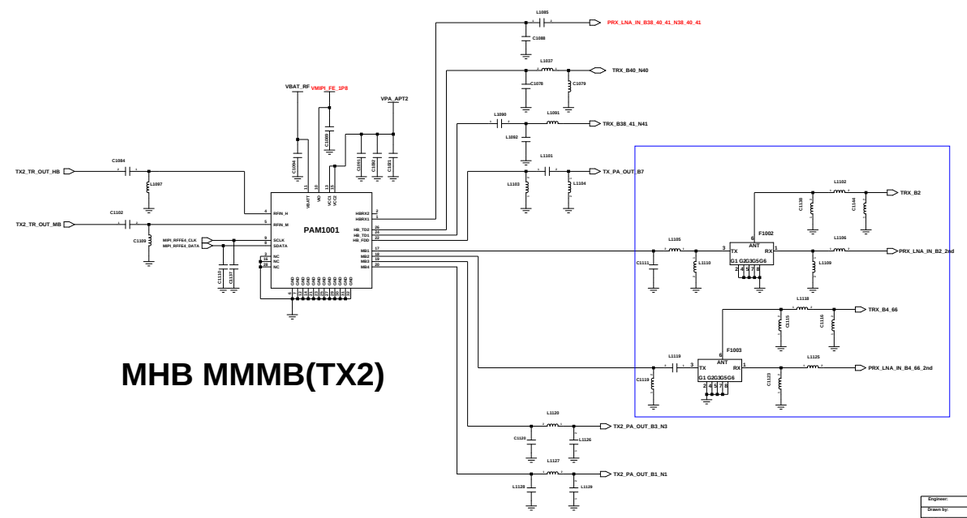

MHB MMMB(TX2)

Engineer:		MAIN	
Drawn by:			
RSD CHK:		TITLE:	Size
DOC CTRL CHK:			
MFG ENGR CHK:			
QA CHK:		RSD	Drawing Number:

Changed by: | Date Changed: | Time Changed: | Page: 1/8

SAMSUNG CONFIDENTIAL
THIS DOCUMENT CONTAINS CONFIDENTIAL
PROPRIETARY INFORMATION THAT IS
SAMSUNG ELECTRONICS CO'S PROPERTY.
DO NOT DISCLOSE TO OR DUPLICATE FOR OTHERS
EXCEPT AS AUTHORIZED BY SAMSUNG.

SUB ANT1

DRX_L/M/H

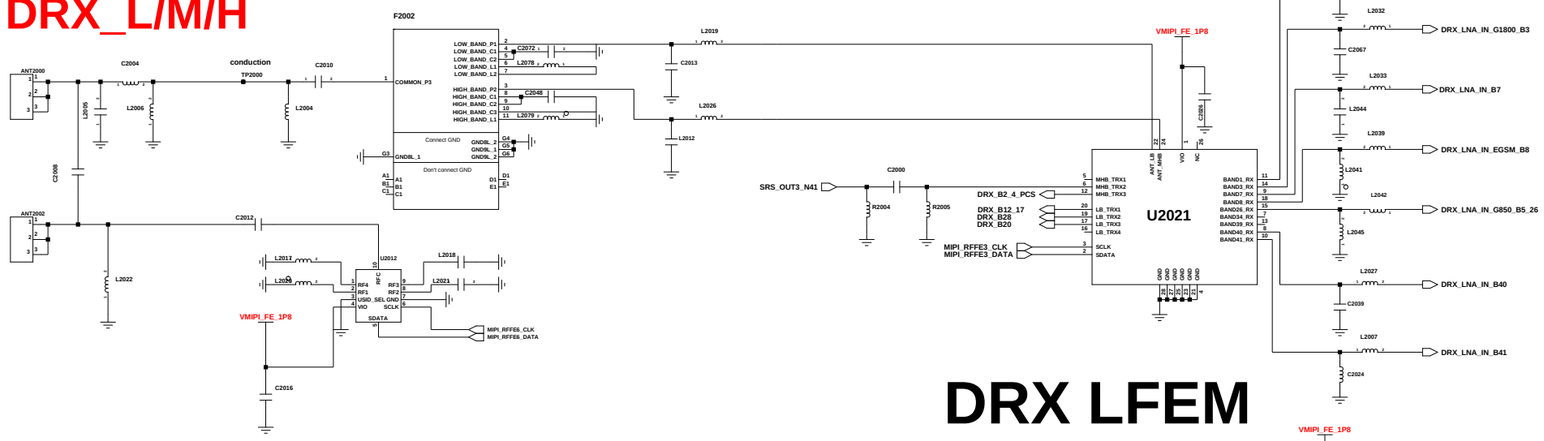

DRX LFEM

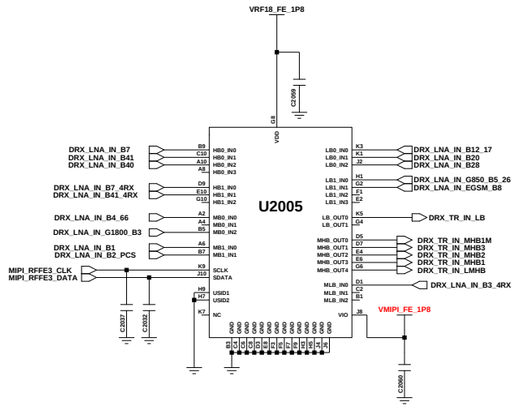

DRX LNA BANK

SUB ANT4

N1/N3 DRX MIMO
N7/N41 PRX MIMO
N77/78 PRX MIMO

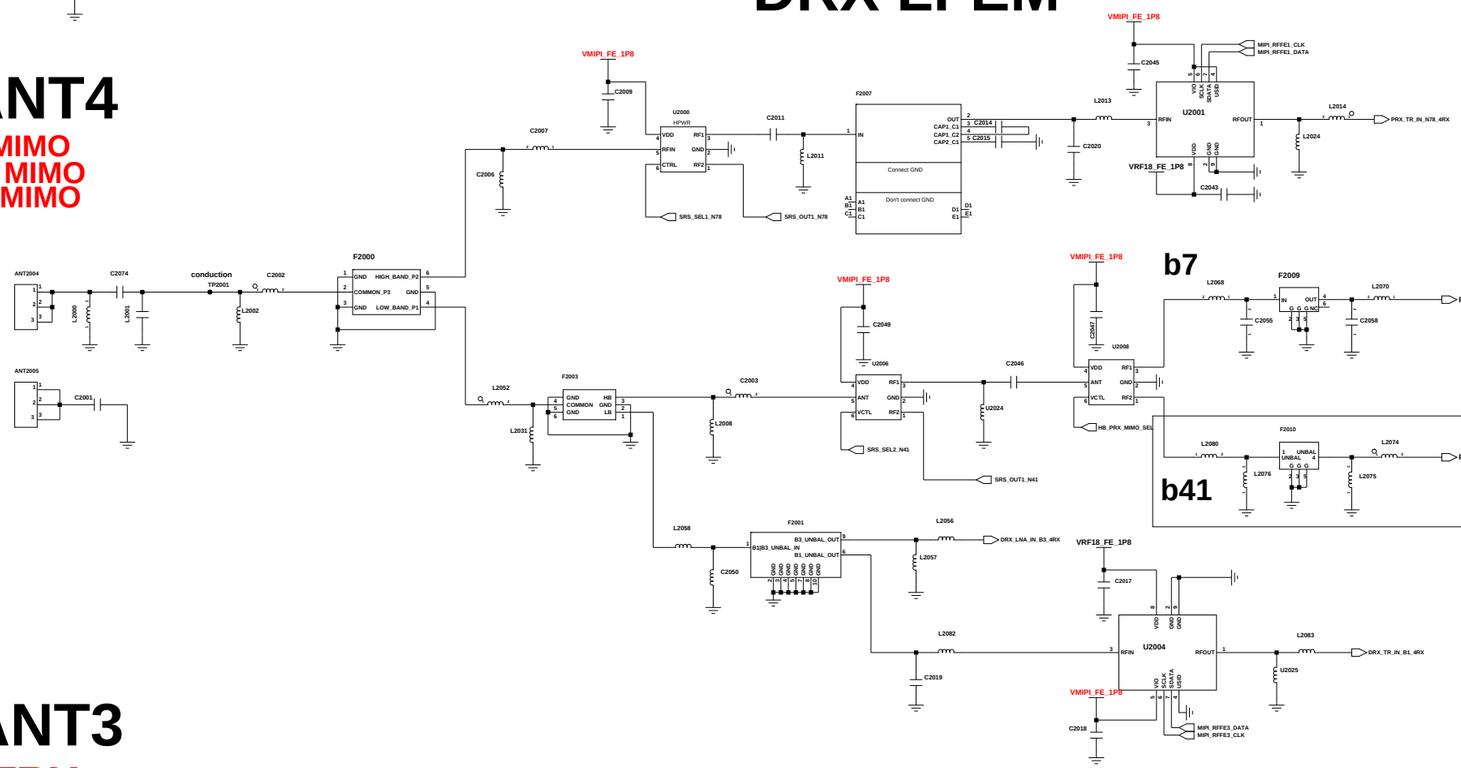

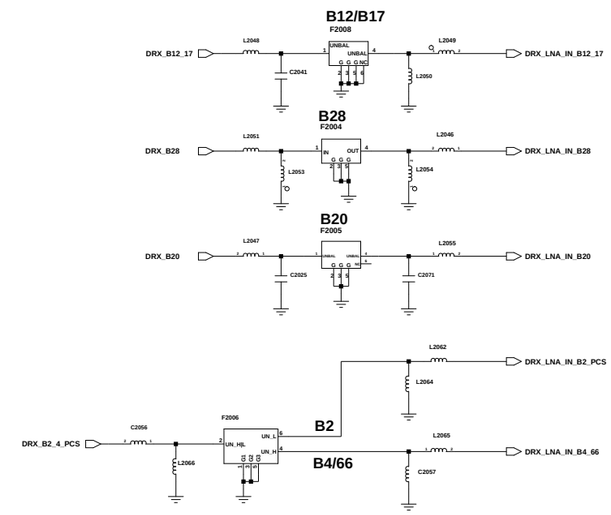

DRX filter

SUB ANT3

N77/78 TRX

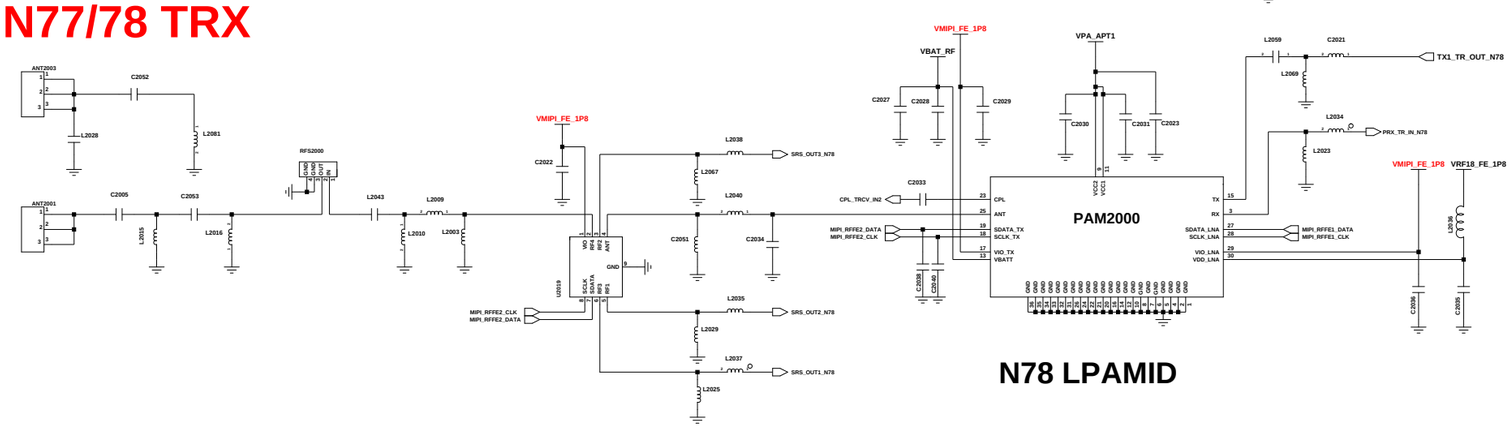

N78 LPAMID

Engineer	DRX
Drawn by:	
R&D CHK:	TITLE:
DOC CTRL CHK:	
MFG ENGR CHK:	
QA CHK:	Drawing Number: 2/7

Changed by: | Date Changed: | Time Changed:

SAMSUNG CONFIDENTIAL
THIS DOCUMENT CONTAINS CONFIDENTIAL
PROPRIETARY INFORMATION THAT IS
SAMSUNG ELECTRONICS CO'S PROPERTY.
DO NOT DISCLOSE TO OR DUPLICATE FOR OTHERS
EXCEPT AS AUTHORIZED BY SAMSUNG.

TRANCEIVER

SUB ANT2

N77/78 DRX MIMO

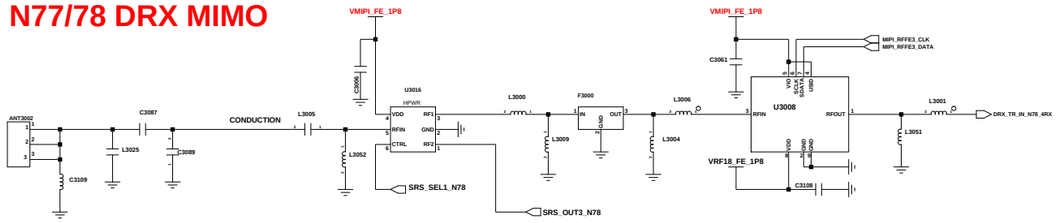

CPL TX1 & TX2

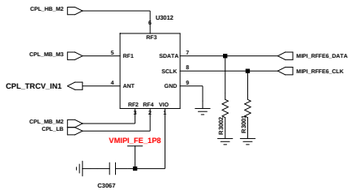

SUB ANT5

N77/78 DRX
N7/N41 DRX MIMO

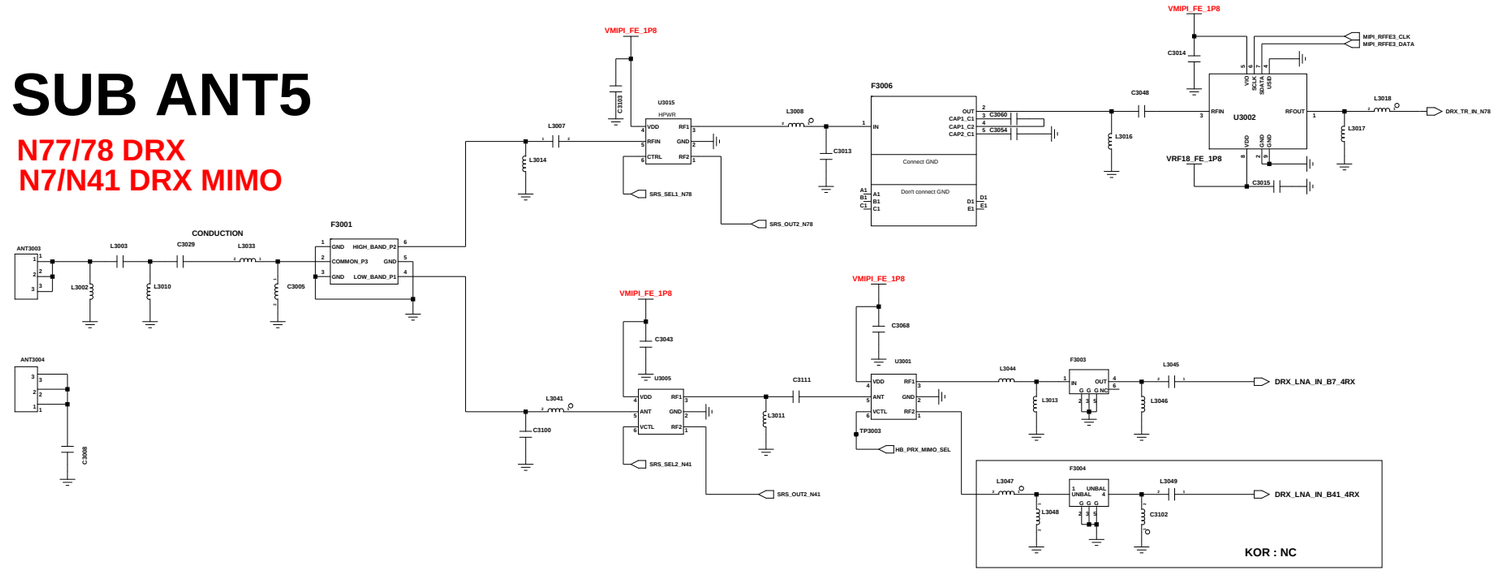

ET MODULATOR

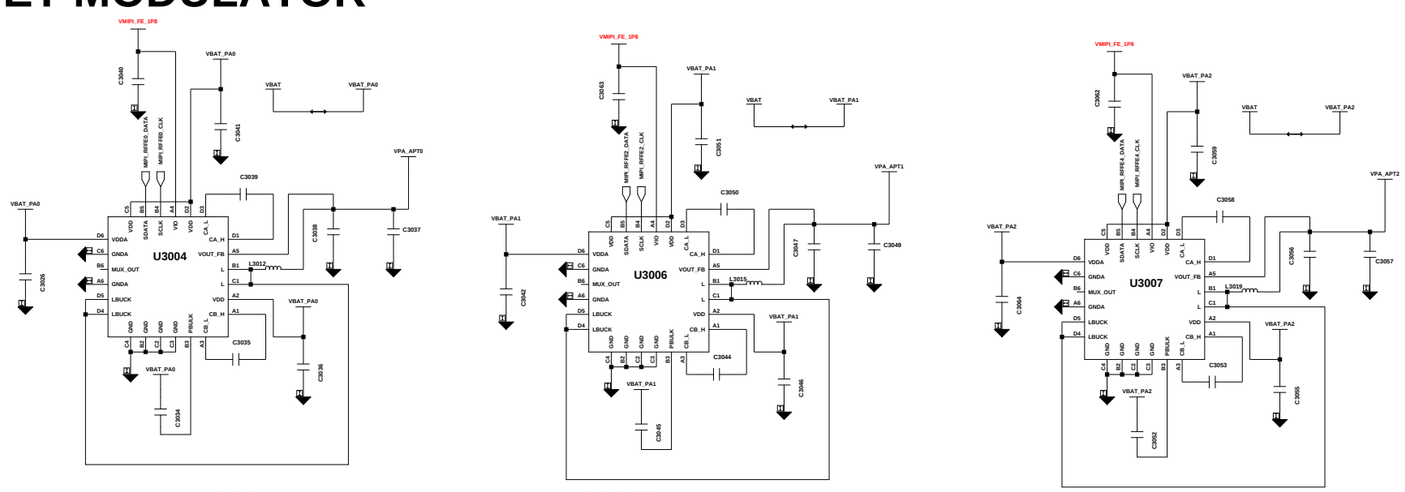

LOW

UHB

M/H

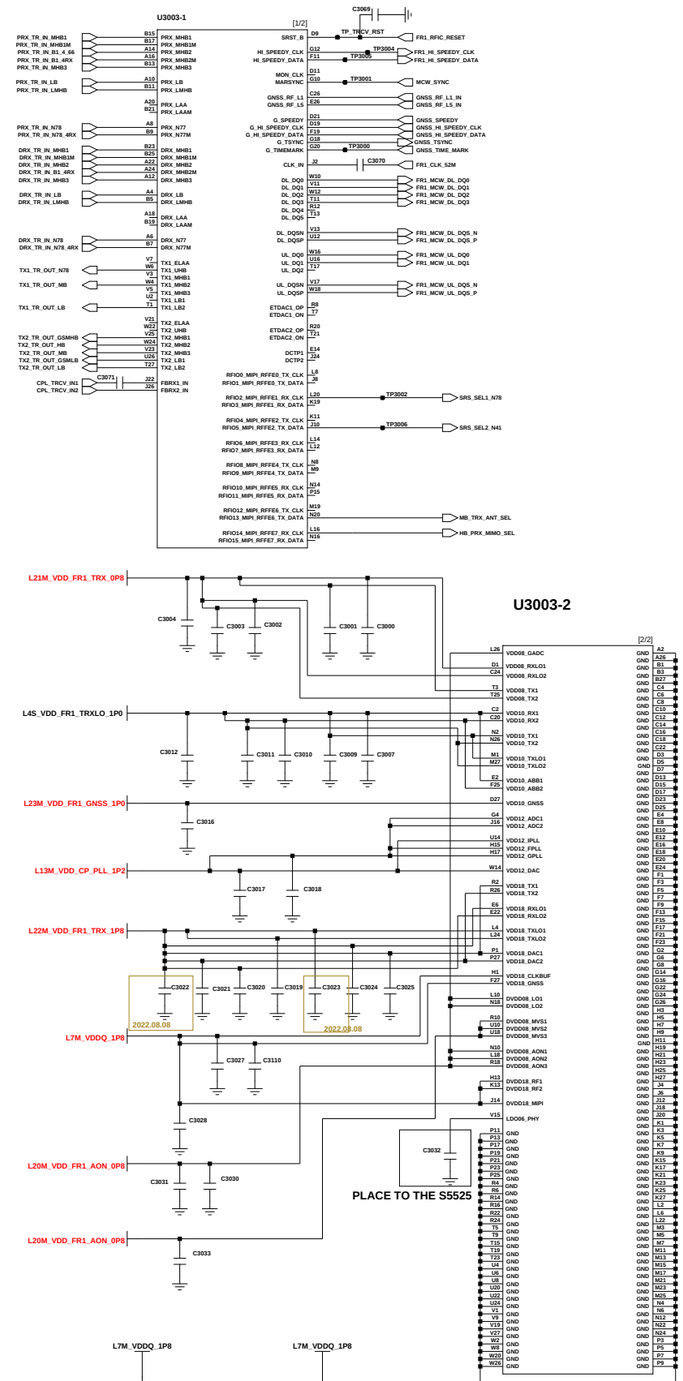

Engineer			
Drawn by:			DRX, TRANCEIVER
R&D CHK:			TITLE: Size:
DOC CTRL CHK:			
MFG ENGR CHK:			
Changed by:	Date Changed:	Time Changed:	QA CHK: Drawing Number 2/7

SAMSUNG CONFIDENTIAL
THIS DOCUMENT CONTAINS CONFIDENTIAL
PROPRIETARY INFORMATION THAT IS
SAMSUNG ELECTRONICS CO'S PROPERTY.
DO NOT DISCLOSE TO OR DUPLICATE FOR OTHERS
EXCEPT AS AUTHORIZED BY SAMSUNG.

BT/WIFI (SUB ANT2)

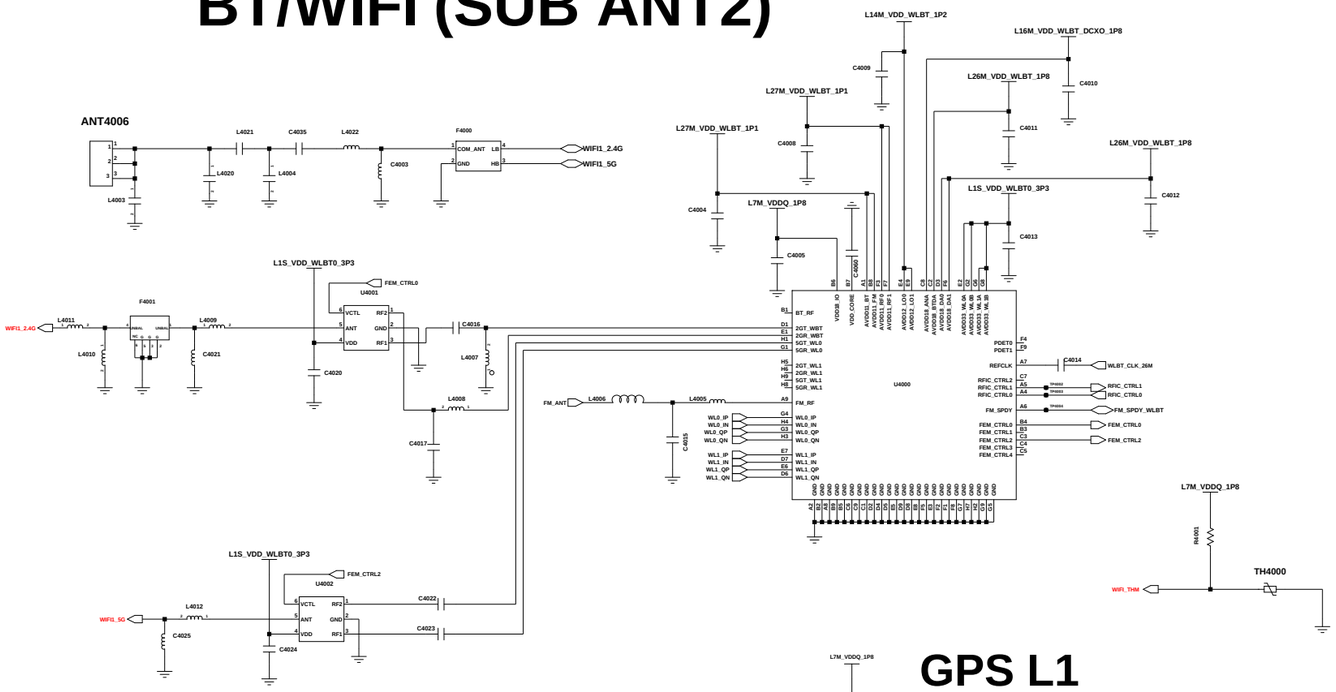

NFC

NFC	NFC PART	Power supply of SIM1		NFC_CHECK:GPIO181 (XGPIO_AP_CP_ALV_3)	
	U4009	R7002	R7003	R6029	R6016
NFC	CONNECT	short	open	10K ohm	open
nonNFC	NC	open	short	open	10K ohm

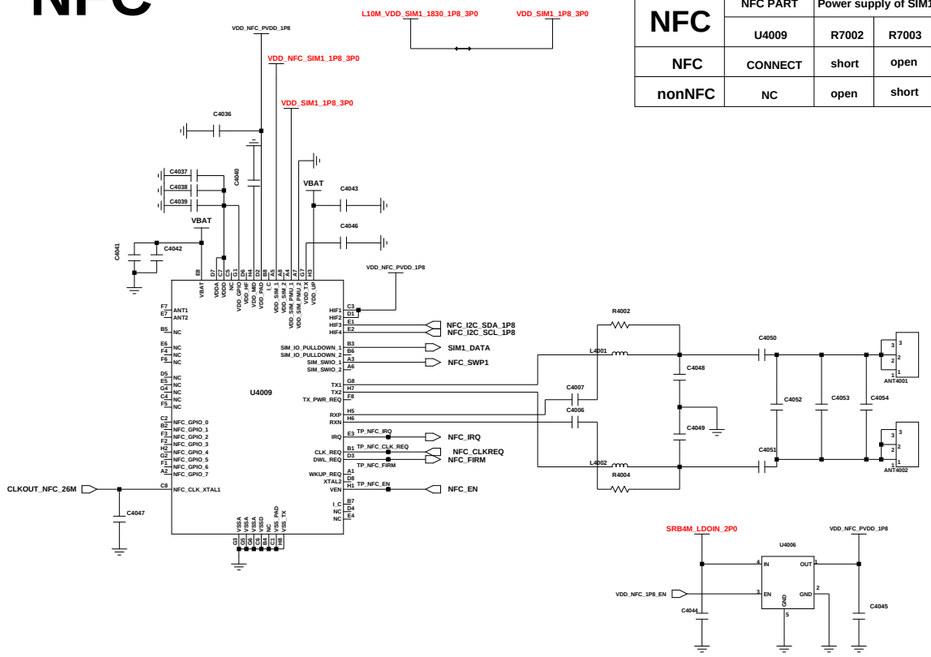

GPS L1

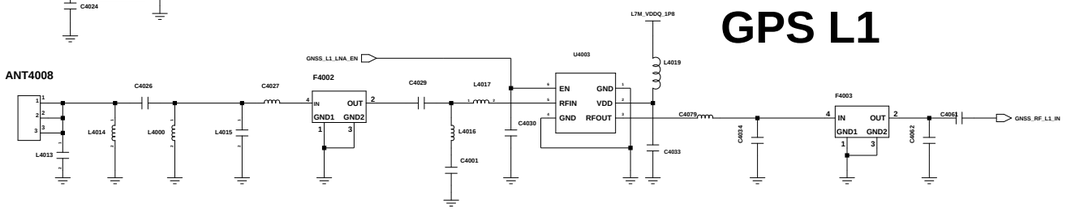

GPS L5

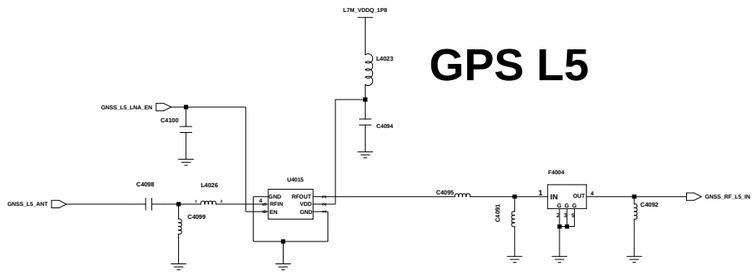

SENSORS

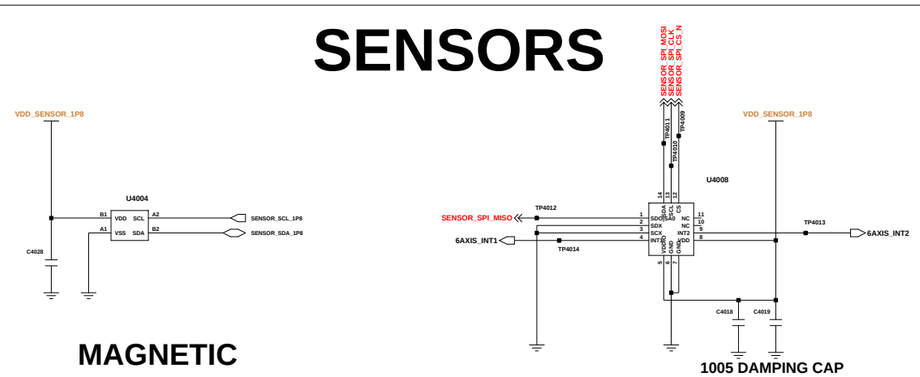

MAGNETIC

6 AXIS(ACC+GRYO)

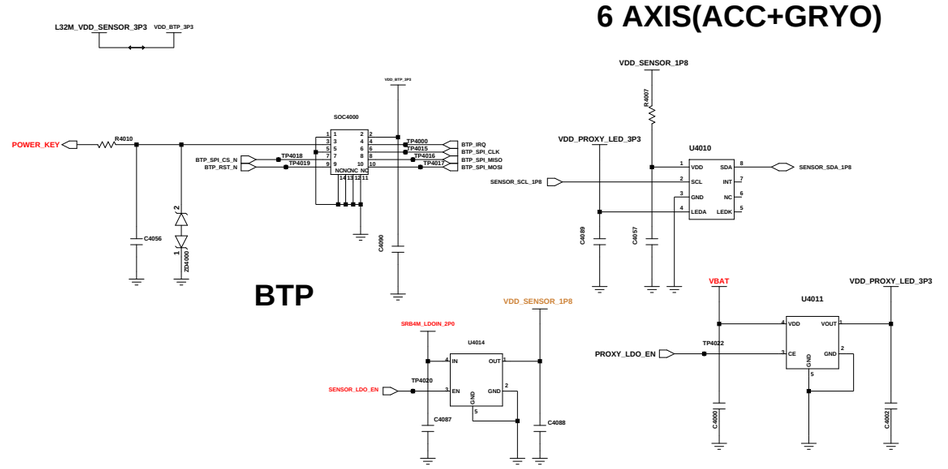

BTP

GRIP SENSOR1

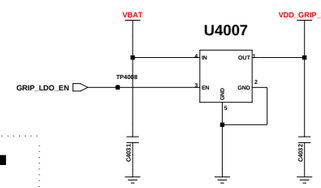

GRIP(SUB) LDO

MST

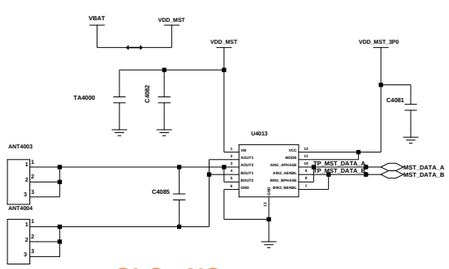

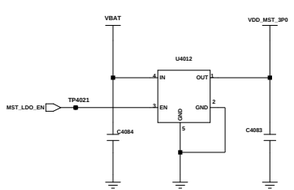

GLO : NC
EUR : NC
KOR : ONLY USE

0.1 delete

Engineer:	SENSOR, WIFI/BT/GPS/NFC
Drawn by:	
R&D CHK:	TITLE:
DOC CTRL CHK:	Size:
MFG ENGR CHK:	

Changed by:	Date Changed:	Time Changed:	QA CHK:	REV	Drawing Number:	Page:
user93						97

SAMSUNG CONFIDENTIAL
THIS DOCUMENT CONTAINS CONFIDENTIAL
AND PROPRIETARY INFORMATION OF
SAMSUNG ELECTRONICS CO'S PROPERTY.
DO NOT DISCLOSE TO OR DUPLICATE FOR OTHERS
EXCEPT AS AUTHORIZED BY SAMSUNG.

RICE

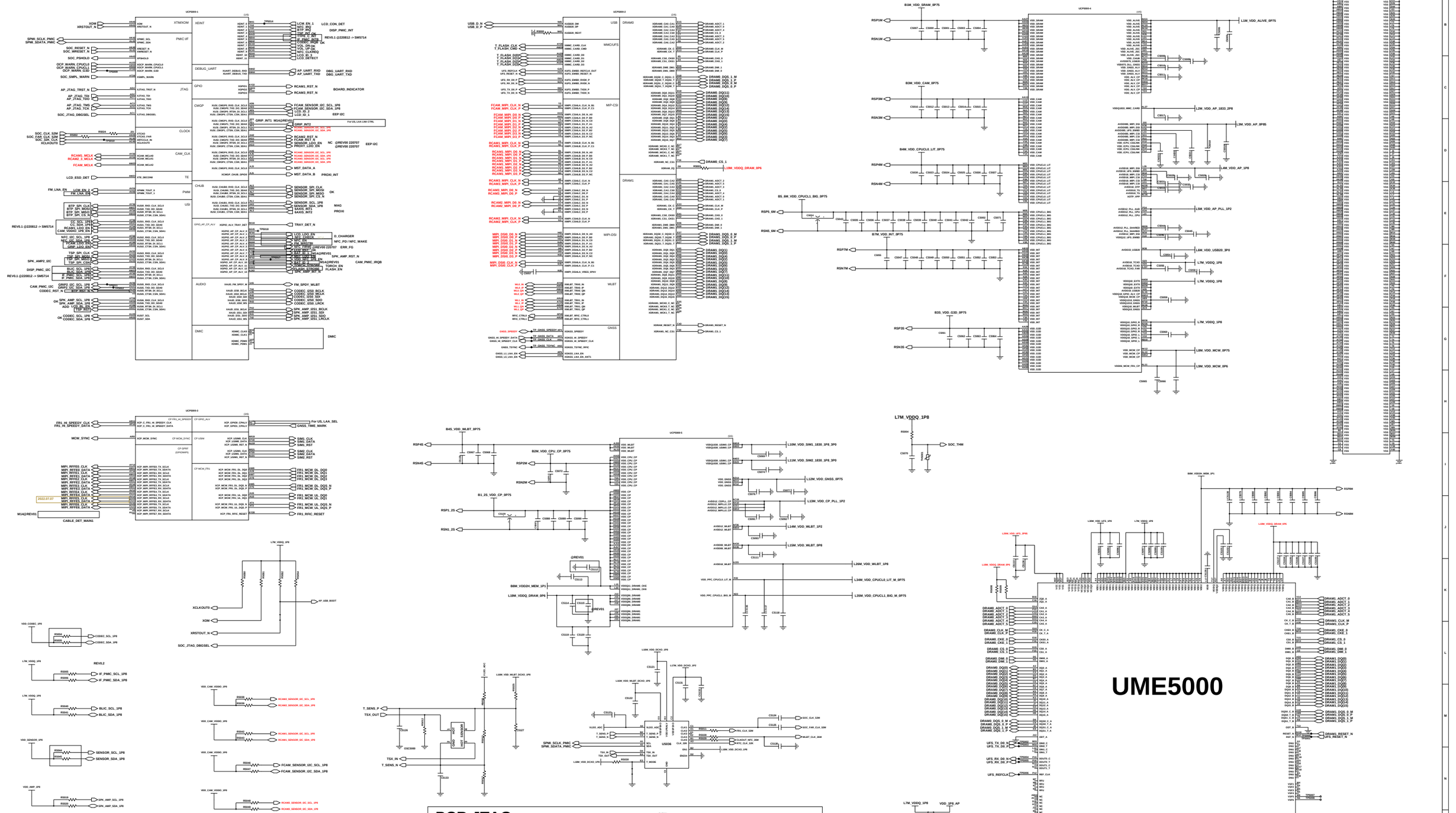

SAMSUNG CONFIDENTIAL
THIS DOCUMENT CONTAINS CONFIDENTIAL PROPRIETARY INFORMATION THAT IS SAMSUNG ELECTRONICS CO'S PROPERTY. DO NOT DISCLOSE TO OR DUPLICATE FOR OTHERS EXCEPT AS AUTHORIZED BY SAMSUNG.

PMIC

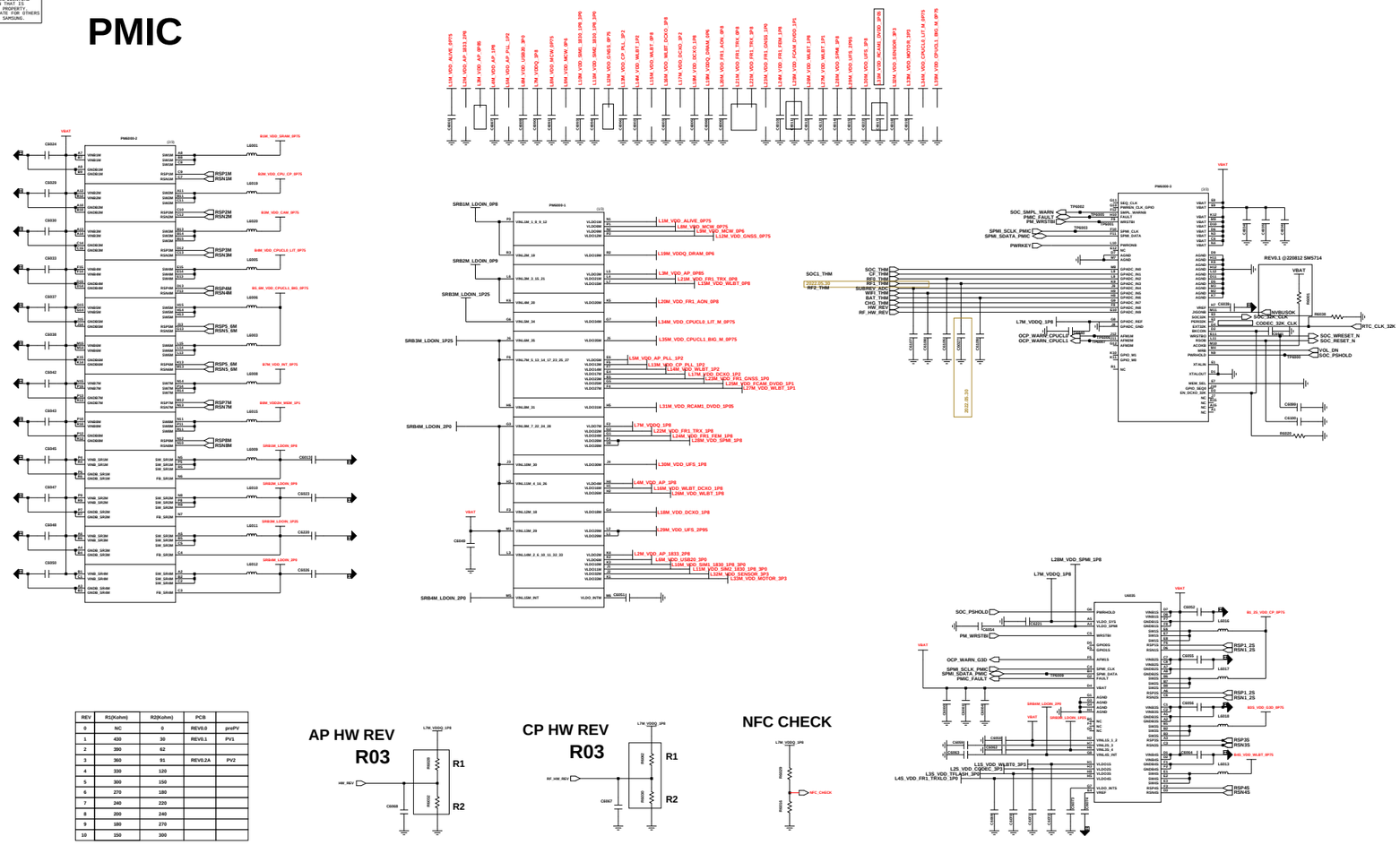

REV	R1(Kohm)	R2(Kohm)	PCB	
0	NC	0	REV0.0	proPV
1	430	30	REV0.1	PV1
2	390	62		
3	360	91	REV0.2A	PV2
4	330	120		
5	300	150		
6	270	180		
7	240	220		
8	200	240		
9	180	270		
10	150	300		

AP HW REV
R03

CP HW REV
R03

NFC CHECK

IF PMIC

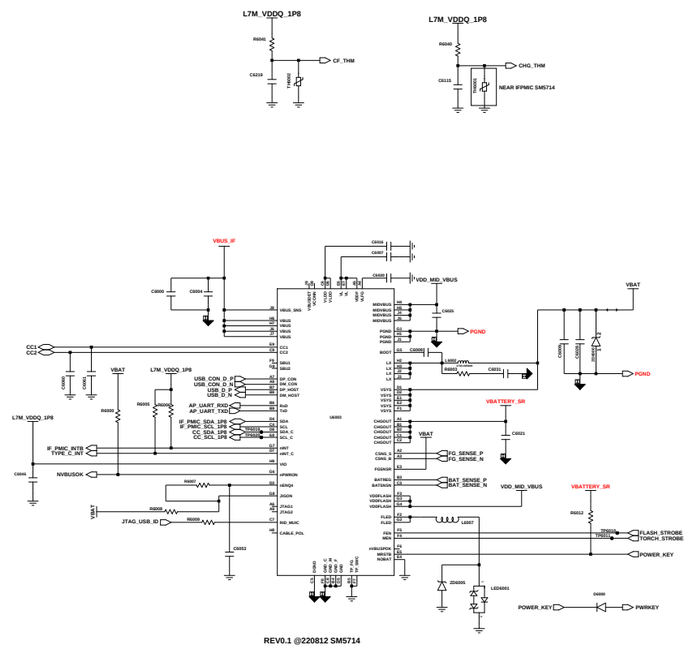

DIRECT CHARGER

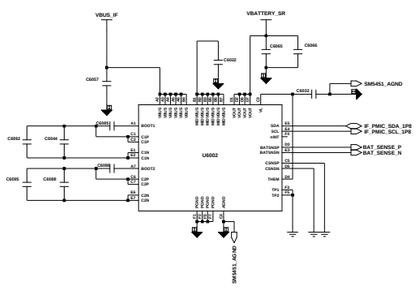

VOLUME KEY

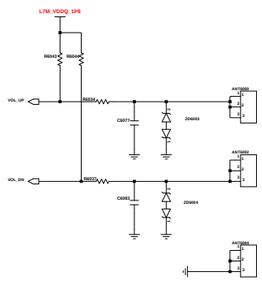

BATTERY CON

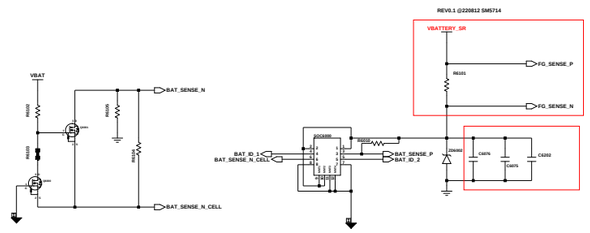

OVP

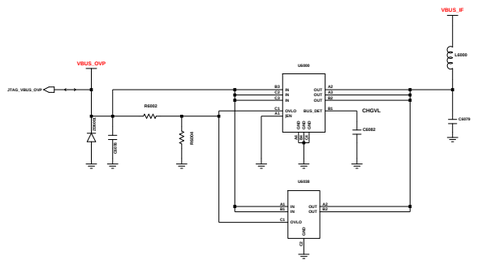

Engineer:			
Drawn by:	PMIC/IF PMIC		
R&D CHK:	TITLE:		SIZE:
DOC CTRL CHK:			
MFG ENGR CHK:			
Q/A CHK:	REV	Drawing Number:	Page 1/2

Changed by: | Date Changed: | Time Changed:

SAMSUNG CONFIDENTIAL
THIS DOCUMENT CONTAINS CONFIDENTIAL
PROPRIETARY INFORMATION THAT IS
SAMSUNG ELECTRONICS CO'S PROPERTY.
DO NOT DISCLOSE TO OR DUPLICATE FOR OTHERS
EXCEPT AS AUTHORIZED BY SAMSUNG.

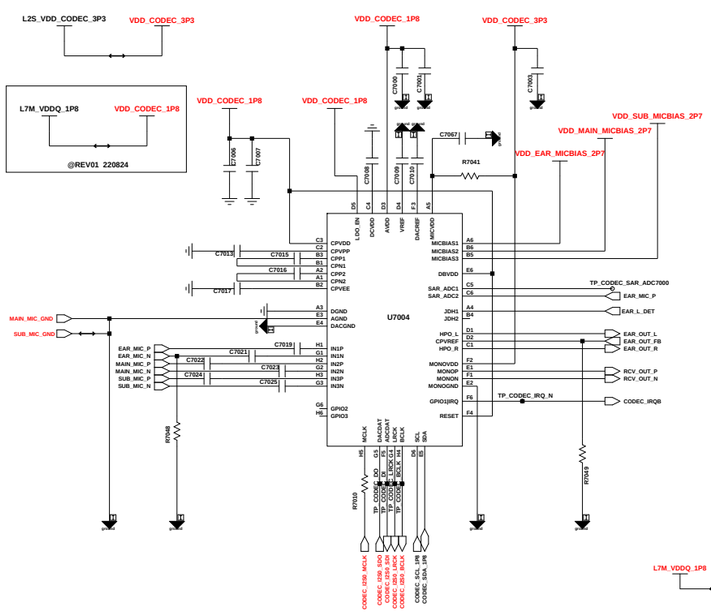

RCV CONTACT

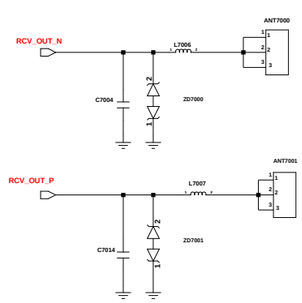

EAR MIC

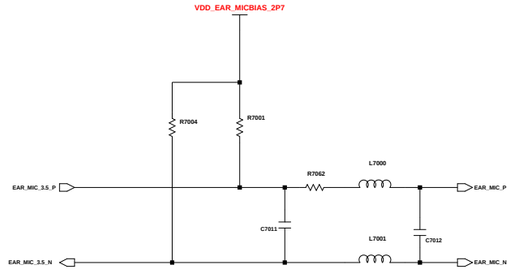

SUB MIC

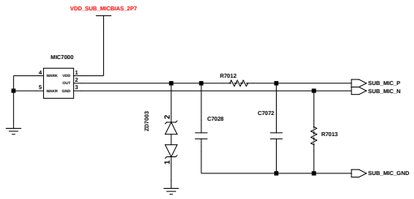

MAIN MIC

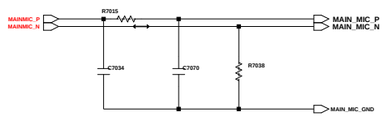

NEAR TO CODEC
GND_ISOLATION

SPK AMP

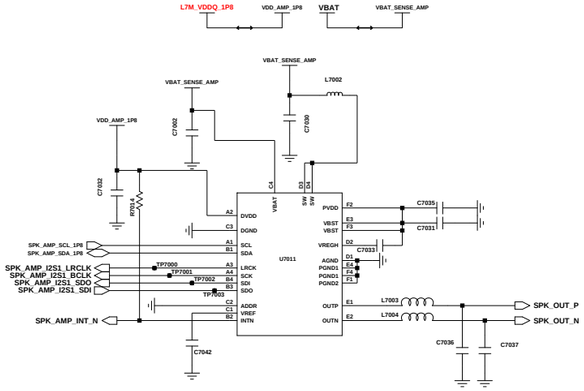

SIM / T-FLASH (3in3)

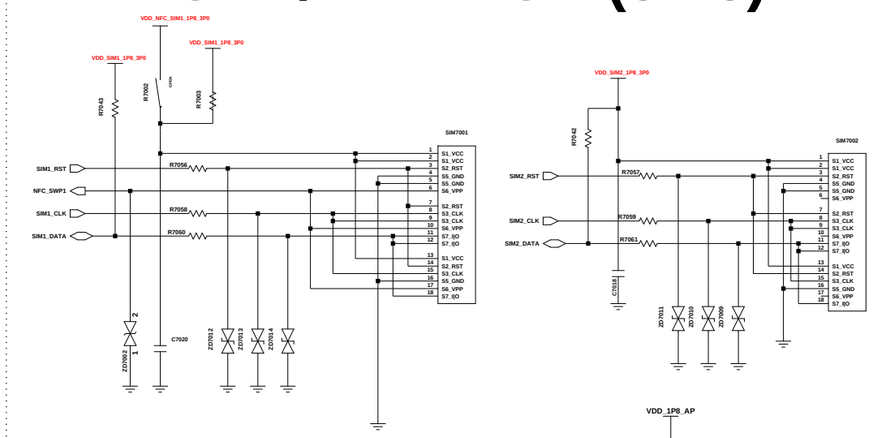

SIM7000

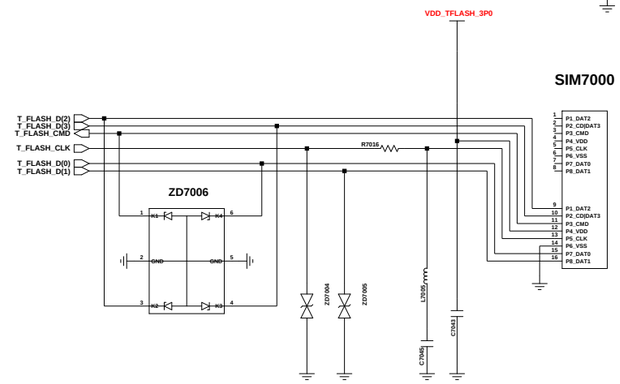

SUB

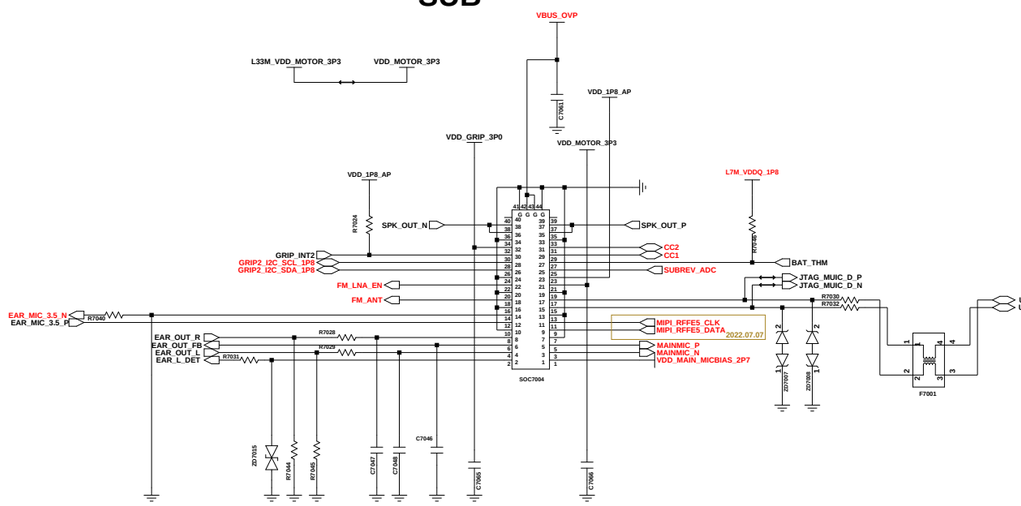

LCD

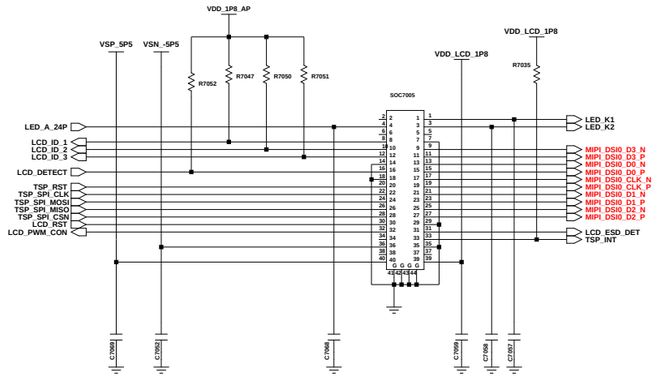

SHIELD CAN

BOTH HOLE

BOTH7000

2D BARCODE

CON7000
CON7001

LCD CONTACT

GAS7000
GAS7002

FRONT CONTACT

GAS7001
GAS7003

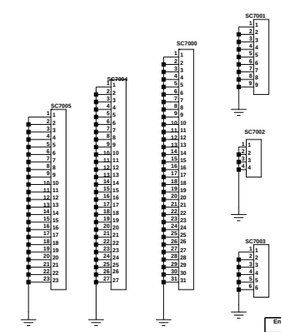

Engineer:			
Drawn by:	AUDIO, SIM/SD, SHIELD CAN		
R&D CHK:	TITLE:		Size:
DOC CTRL CHK:			
MFG ENGR CHK:			
QA CHK:	REV	Drawing Number:	Page:6/7

Changed by:	Date Changed:	Time Changed:

SAMSUNG CONFIDENTIAL
THIS DOCUMENT CONTAINS CONFIDENTIAL PROPRIETARY INFORMATION THAT IS SAMSUNG ELECTRONICS CO'S PROPERTY. DO NOT DISCLOSE TO OR DUPLICATE FOR OTHERS EXCEPT AS AUTHORIZED BY SAMSUNG.

CAMERA_PART

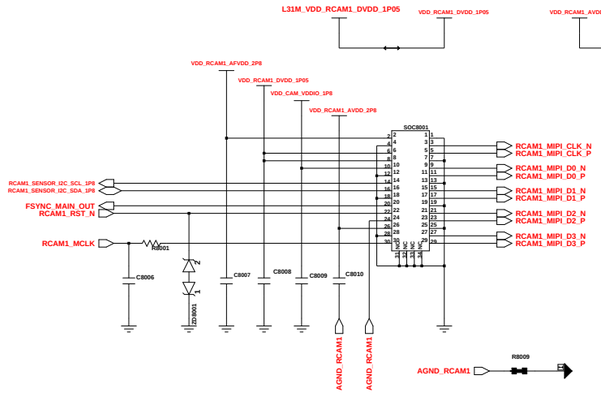

RCAM1_50M(30PIN)

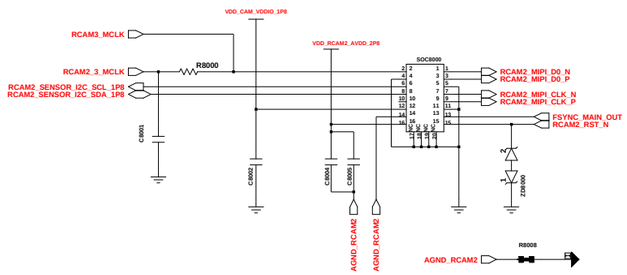

RCAM2_2M BOKEH CAMERA(16PIN)

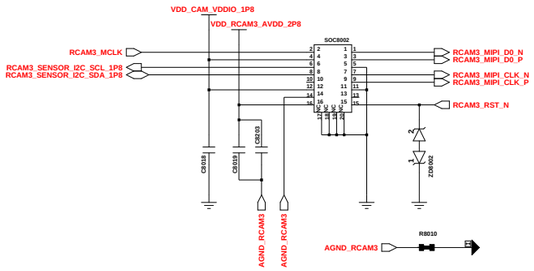

RCAM3_2M MACRO CAMERA(16PIN)

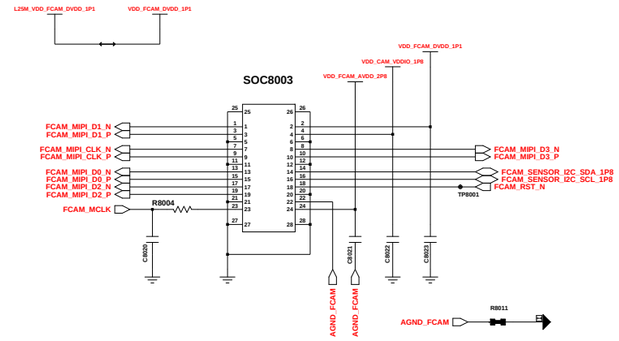

FCAM_13M(24PIN)

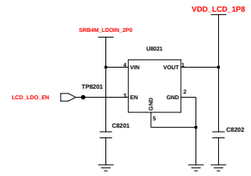

DISPLAY PMIC

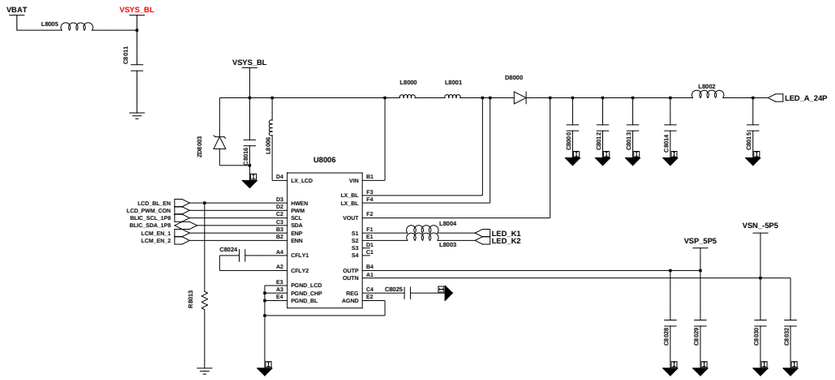

CAM PMIC

RCAM1

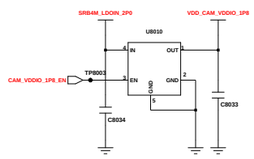

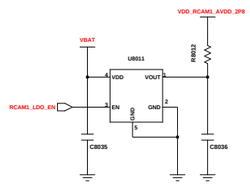

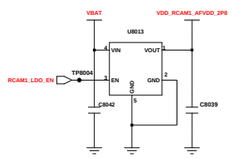

RCAM2/3

FCAM

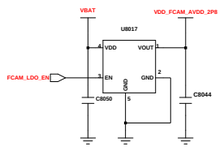

Engineer:			
Drawn by:			CAMERA, DISPLAY
R&D CHK:			TITLE: Size:
DOC CTRL CHK:			
MFG ENGR CHK:			
Changed by:	Date Changed:	Time Changed:	QA CHK: REV: Drawing Number: Page: 7/7

SM-M146B

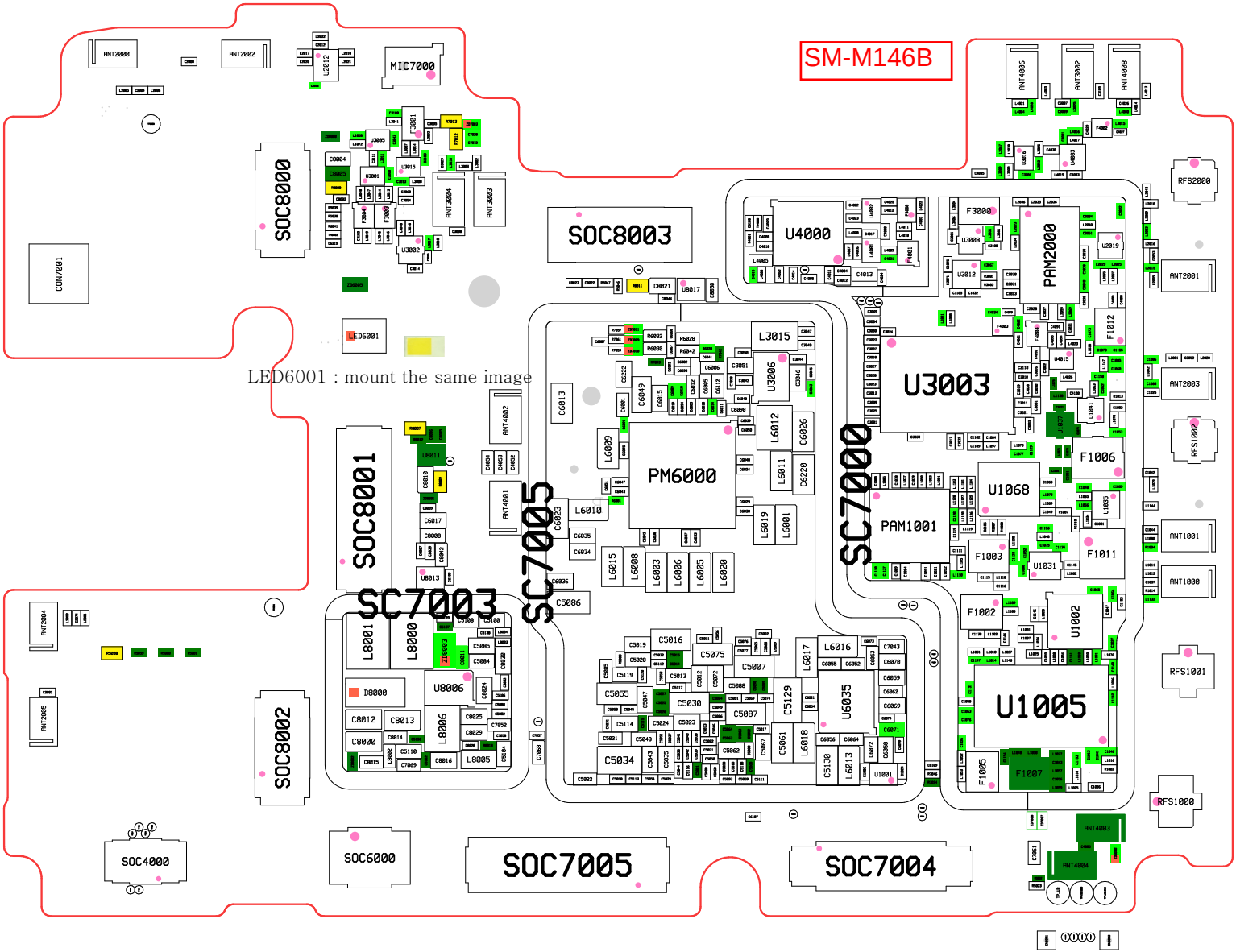

LED6001 : mount the same image

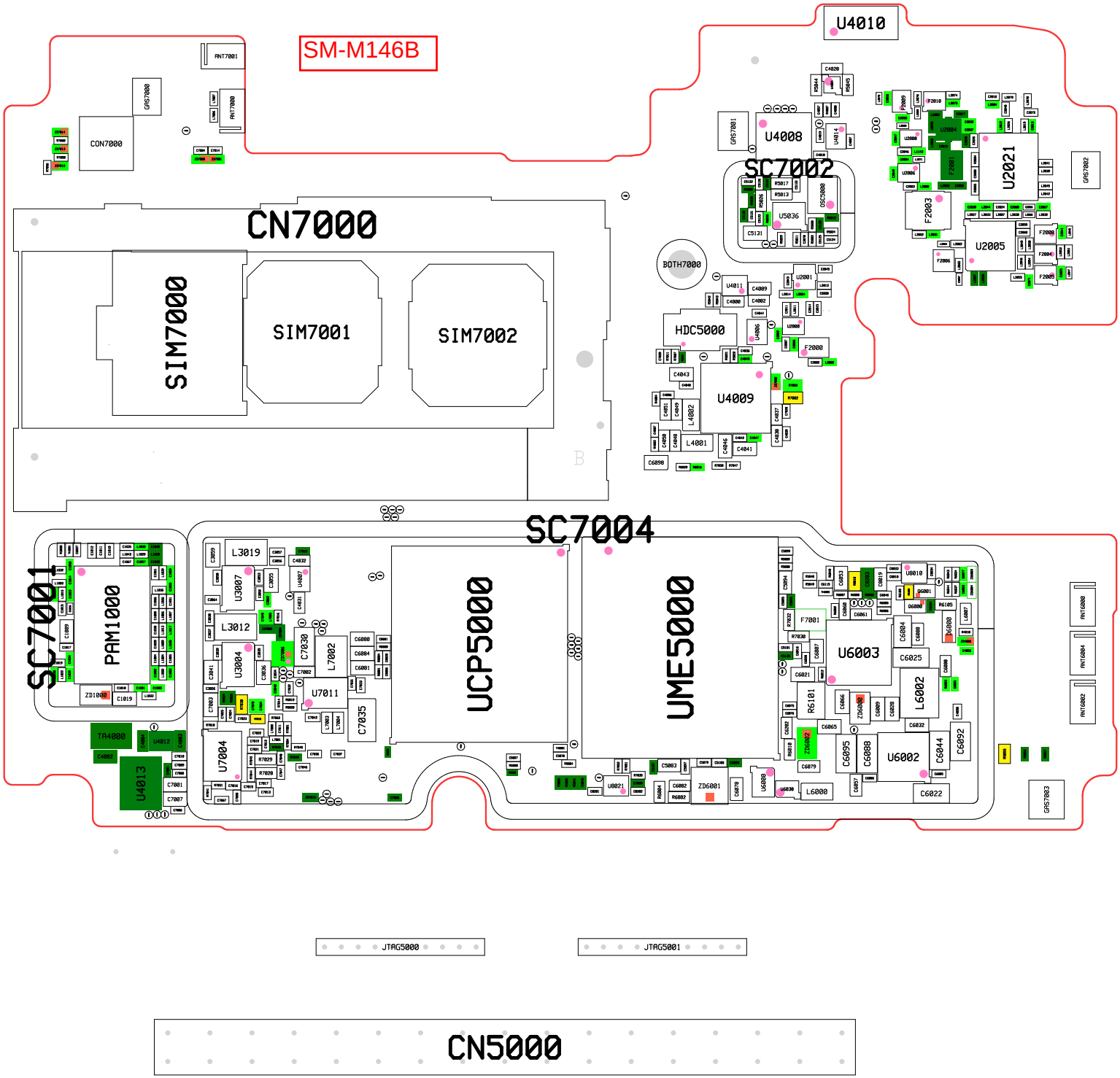
SM-M146B
CN7000
SIM7000
SIM7001
SIM7002
SC7002
SC7004
SC7001
UCP5000
UME5000
PAM1000
U4010
U4008
U2021
U2005
U4009
HDC5000
BOTH7000
U6003
U6002
U4013
U7004
U7011
U3004
U3007
L3019
L3012
L7002
C7030
C7035
L6002
L6000
ZD6001
ZD6002
ZD1000
TA4000
CON7000
ANT7001
ANT7000
GAS7000
GAS7001
GAS7002
GAS7003
ANT6000
ANT6004
ANT6002
JTAG5000
JTAG5001
CN5000

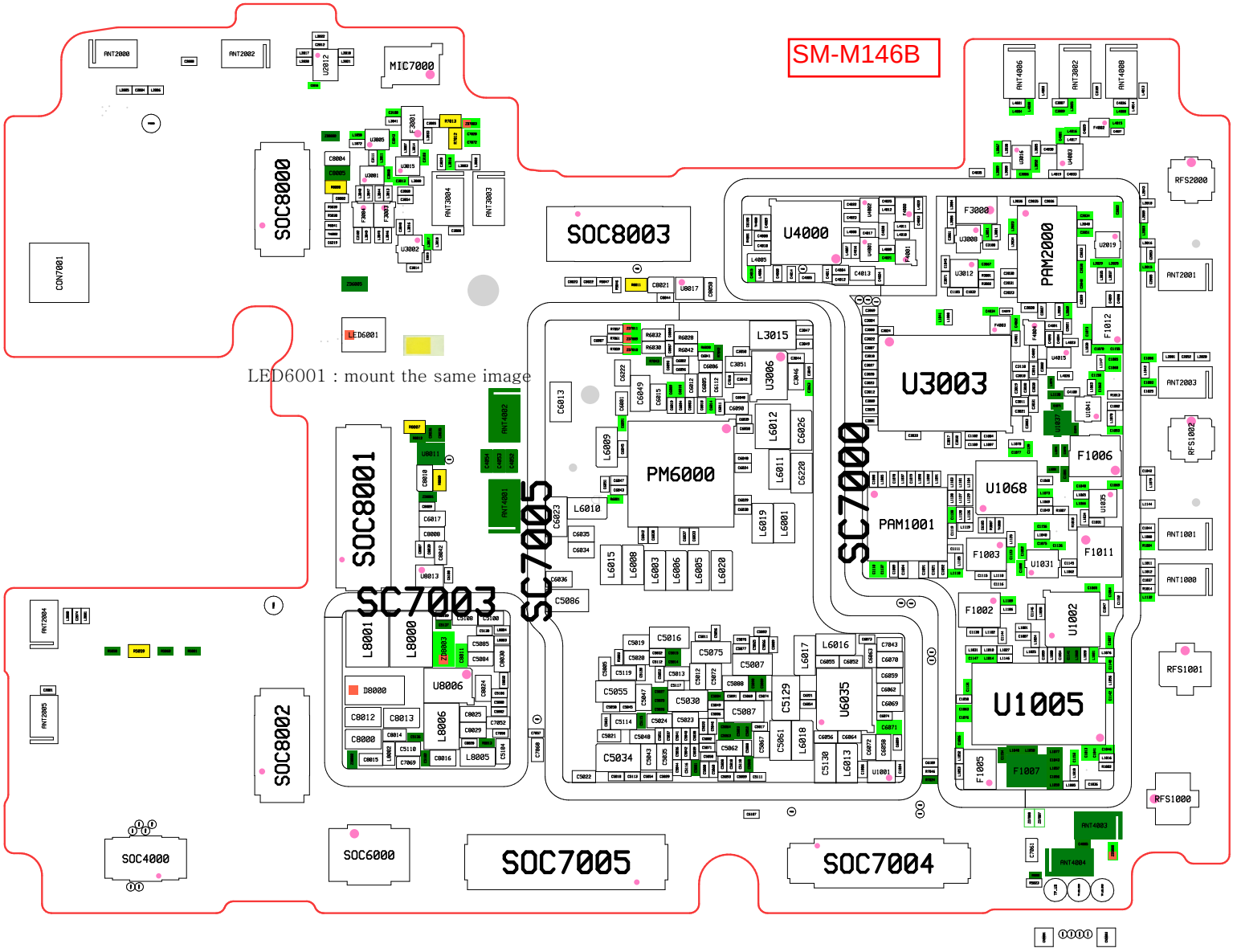
SM-M146B
LED6001 : mount the same image
SOC8000
SOC8001
SOC8002
SOC8003
SOC4000
SOC6000
SOC7005
SOC7004
SC7000
SC7003
SC7005
MIC7000
CON7001
LED6001
U4000
U3003
PAM2000
PAM1001
PM6000
U1068
U1005
U6035
U8006
D8000
ANT2000
ANT2002
ANT3003
ANT3004
ANT4002
ANT4001
ANT4006
ANT3002
ANT4008
RFS2000
ANT2001
ANT2003
RFS1002
ANT1001
ANT1000
RFS1001
RFS1000
ANT4003
ANT4004
ANT2004
ANT2005

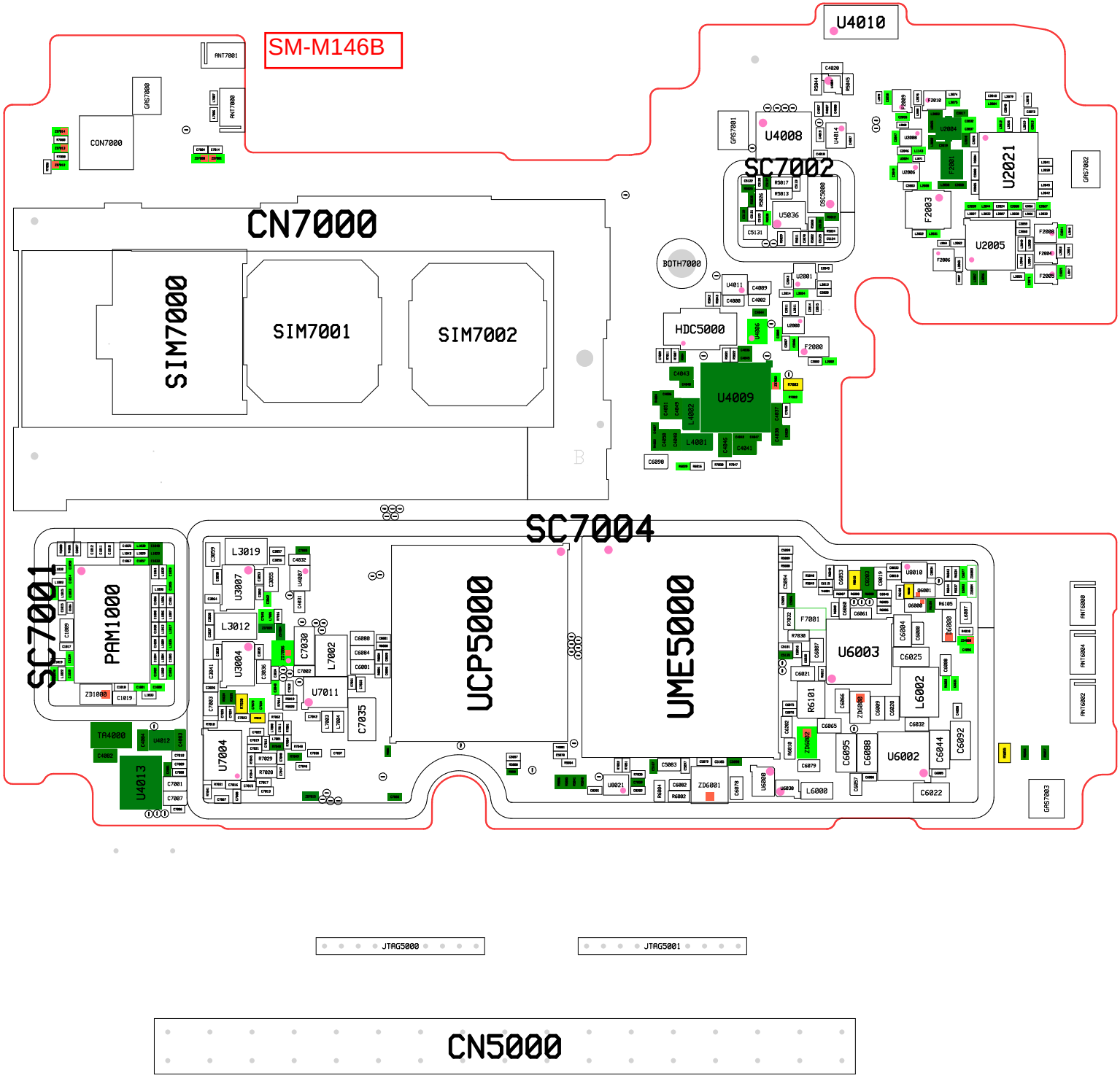
SM-M146B
U4010
CN7000
SIM7000
SIM7001
SIM7002
SC7002
U4008
U2021
U2005
BOTH7000
HDC5000
U4009
SC7004
SC7001
PAM1000
UCP5000
UME5000
U6003
U6002
U4013
U7004
U7011
L3019
L3012
U3007
U3004
L7002
C7030
C7035
L6002
L6000
R6101
F7001
ZD6001
TA4000
CON7000
JTAG5000
JTAG5001
CN5000

SM-M146B

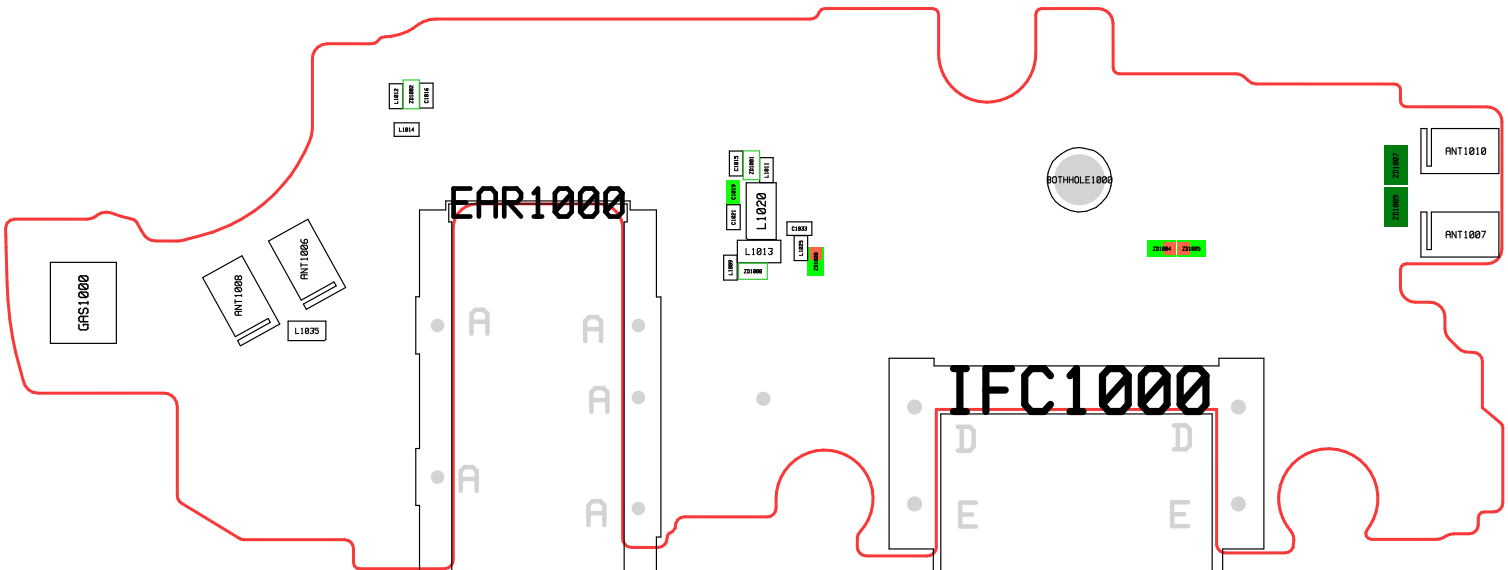

EAR1000
IFC1000
GAS1000
ANT1008
ANT1006
L1035
L1014
L1012
ZD1002
C1016
C1015
ZD1001
L1011
C1019
C1021
L1020
C1033
L1013
L1009
ZD1000
L1025
ZD1008
BOTHHOLE1000
ZD1004
ZD1005
ZD1007
ZD1009
ANT1010
ANT1007
A
D
E

SM-M146B

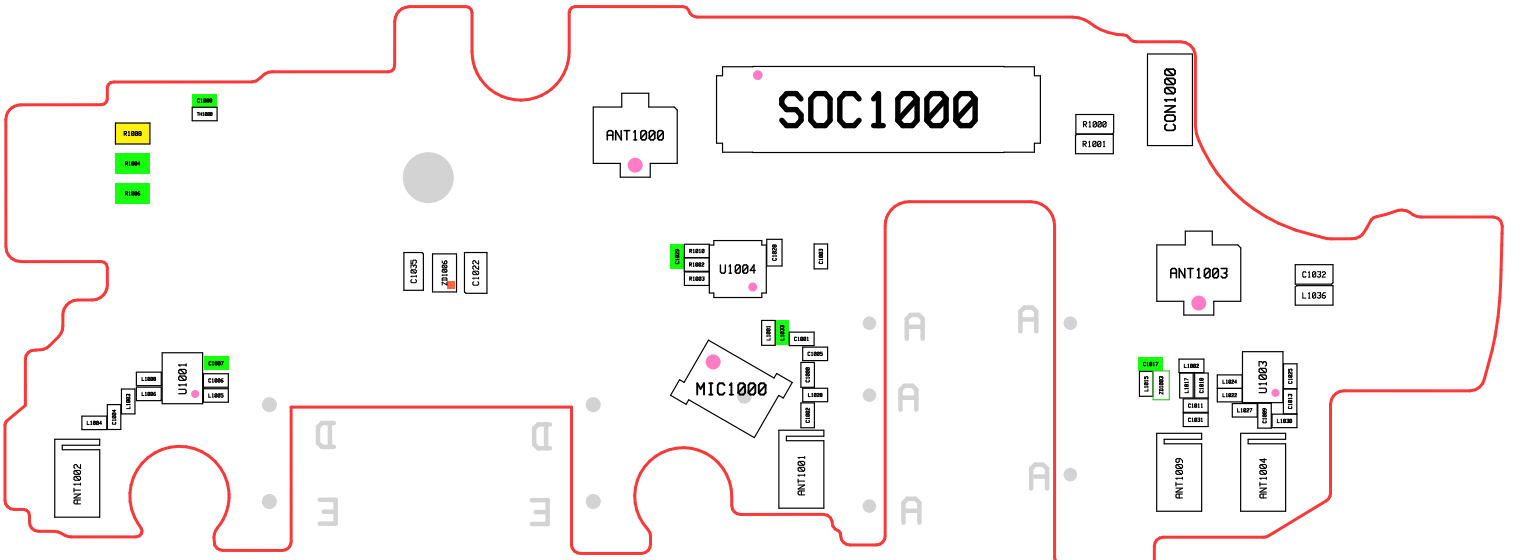

SOC1000
ANT1000
CON1000
R1000
R1001
R1004
R1006
C1035
ZD1006
C1022
U1004
ANT1003
C1032
L1036
MIC1000
U1001
U1003
ANT1002
ANT1001
ANT1009
ANT1004

SM-M146B

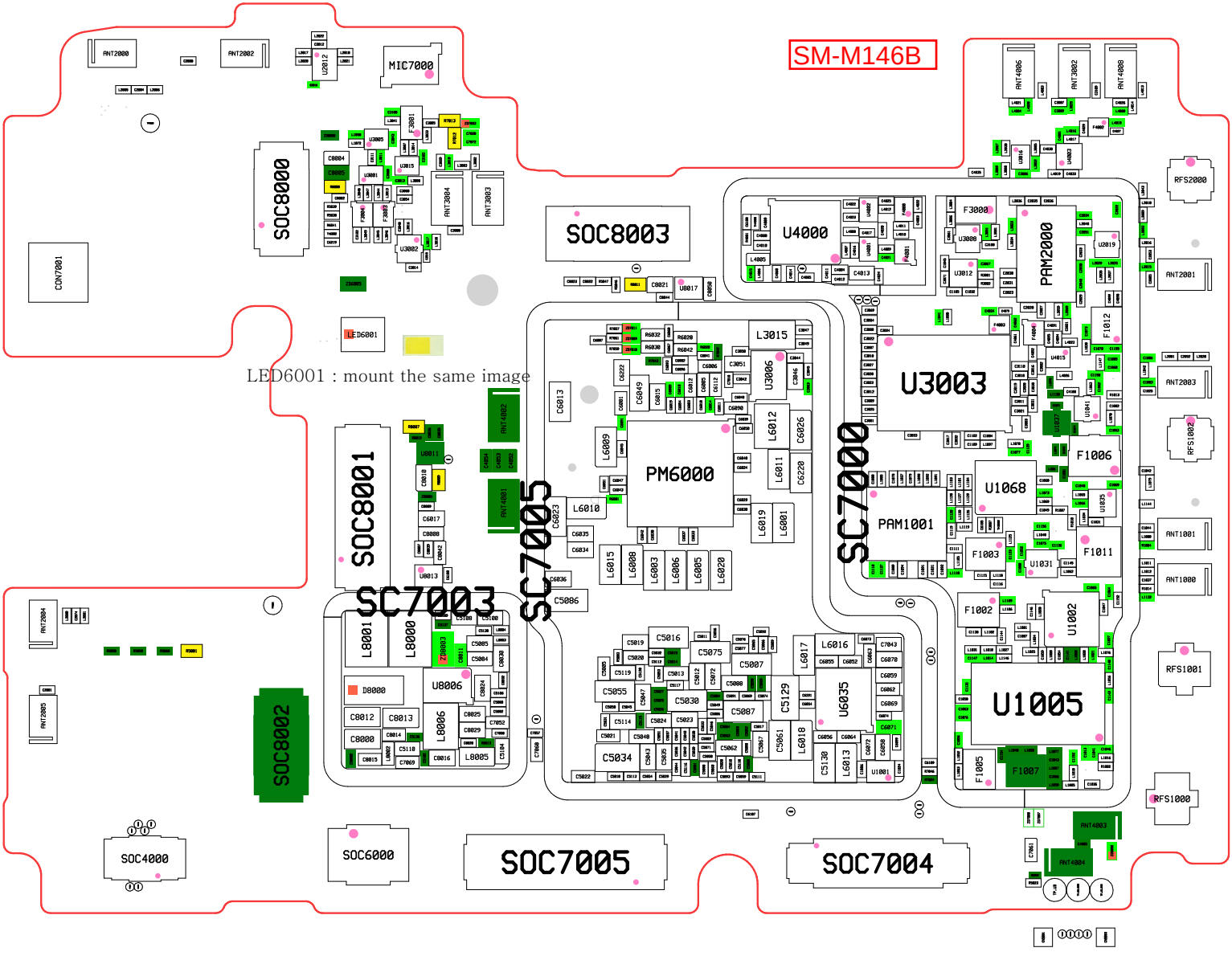

LED6001 : mount the same image

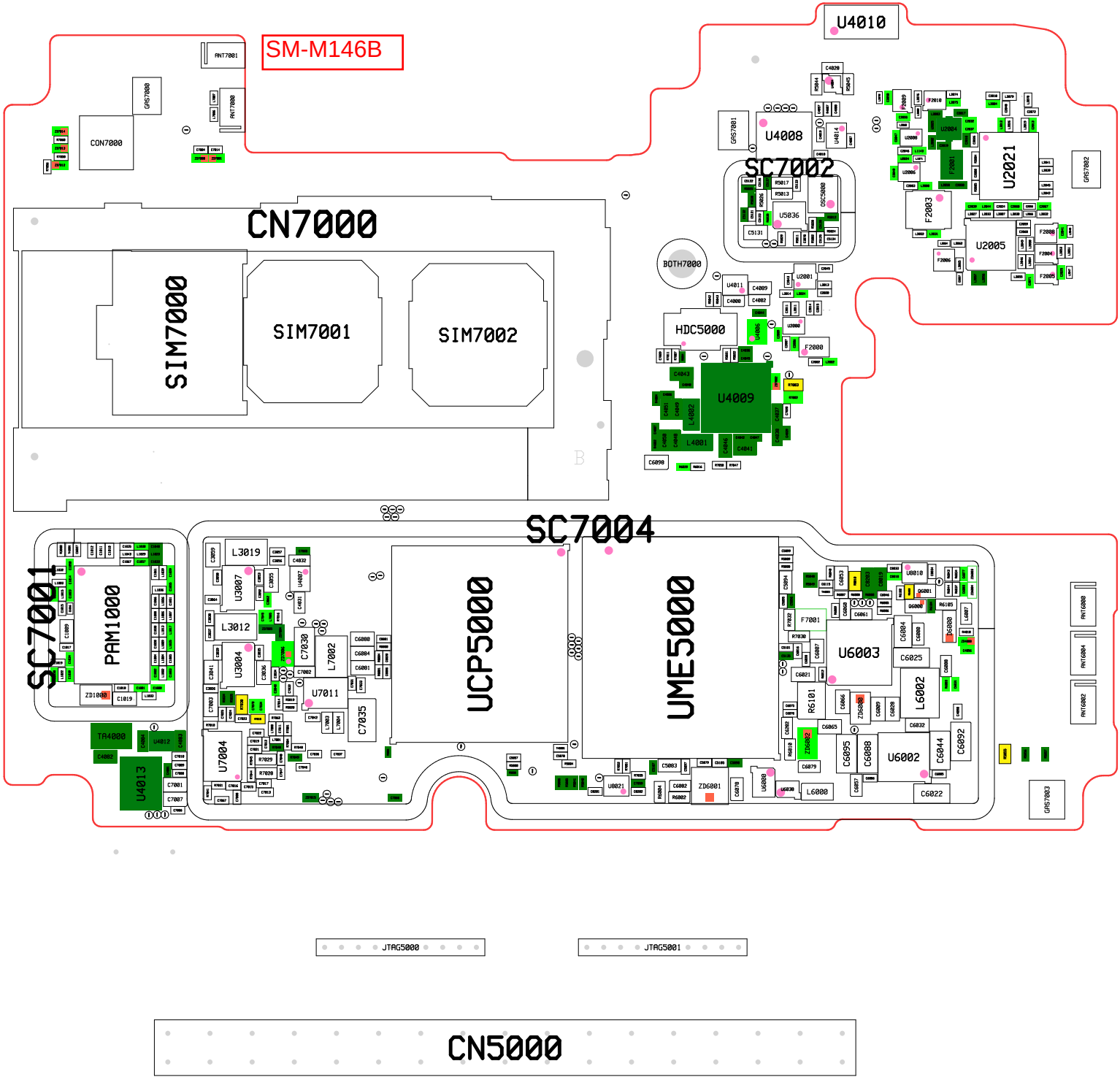
SM-M146B
U4010
CN7000
SIM7000
SIM7001
SIM7002
SC7002
U4008
U2021
U2005
BOTH7000
HDC5000
U4009
SC7004
SC7001
PAM1000
UCP5000
UME5000
U6003
U6002
U4013
U7004
U7011
L3019
L3012
U3007
U3004
L7002
C7030
C7035
TA4000
L6002
L6000
R6101
F7001
ZD6001
ZD1000
JTAG5000
JTAG5001
CN5000

SM-M146B

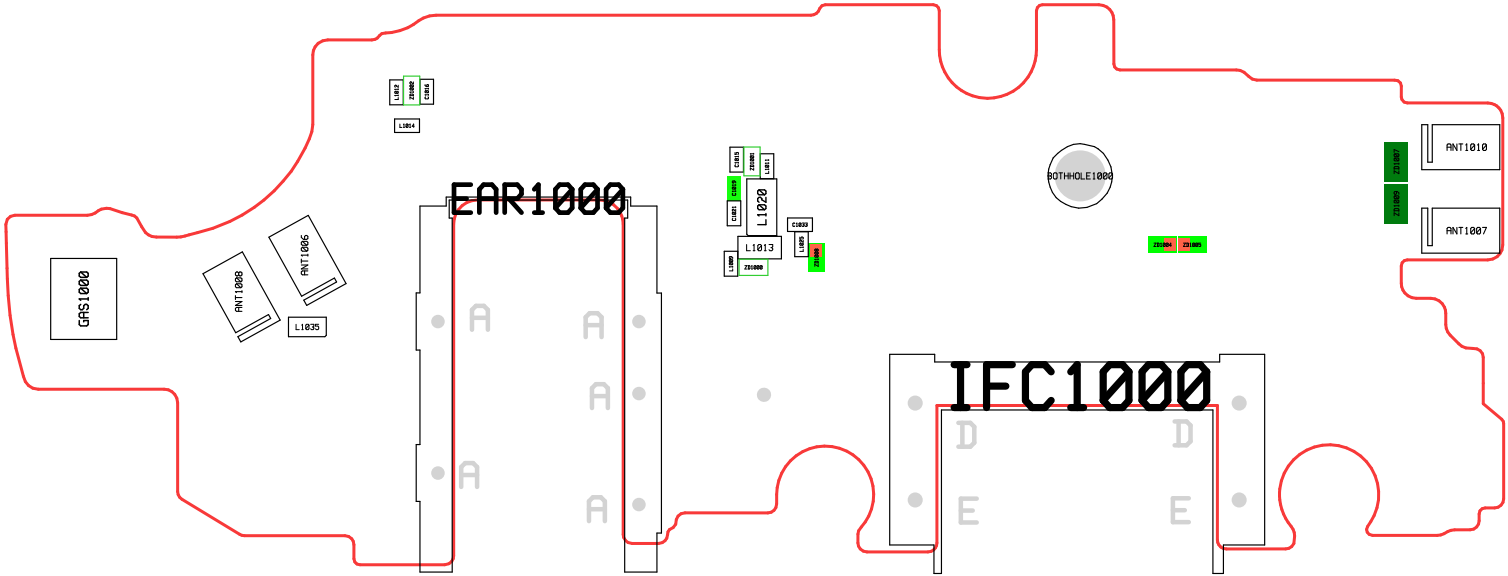
EAR1000
IFC1000
GAS1000
ANT1008
ANT1006
L1035
L1014
L1020
L1013
BOTHOLE1000
ANT1010
ANT1007
A
D
E

SM-M146B

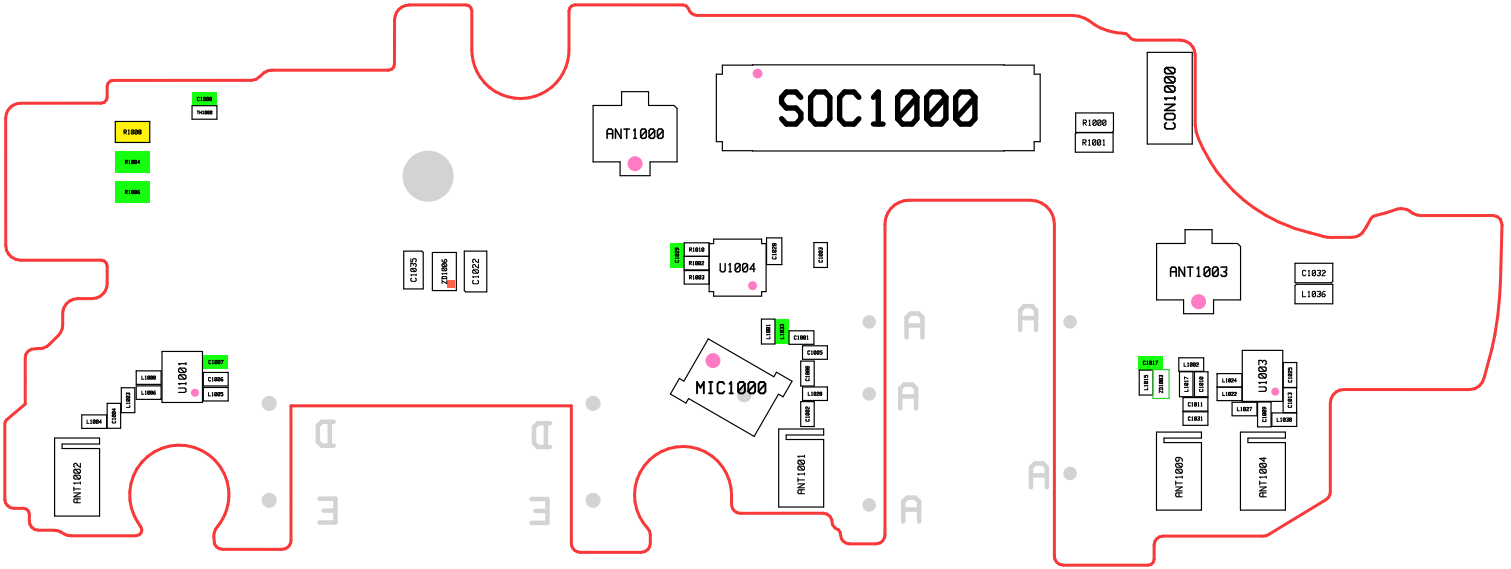

SOC1000
ANT1000
CON1000
R1000
R1001
R1000
R1004
R1006
C1000
TH1000
C1035
ZD1006
C1022
U1004
C1029
R1010
R1002
R1003
C1020
C1003
ANT1003
C1032
L1036
MIC1000
L1001
L1003
C1001
C1005
C1008
L1020
C1007
C1006
L1005
U1001
L1000
L1006
L1003
C1004
L1004
ANT1002
ANT1001
C1017
L1015
ZD1003
L1002
L1017
C1010
C1011
C1031
L1024
L1022
L1027
U1003
C1025
C1013
C1009
L1030
ANT1009
ANT1004